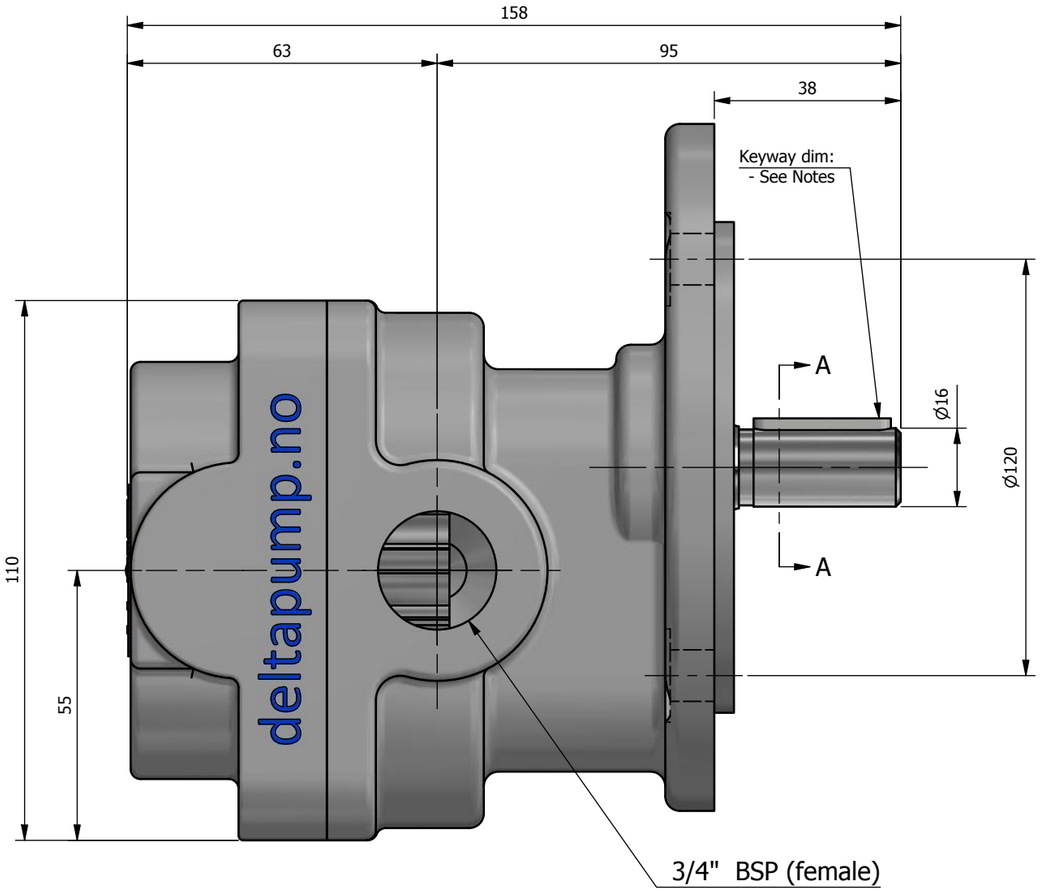

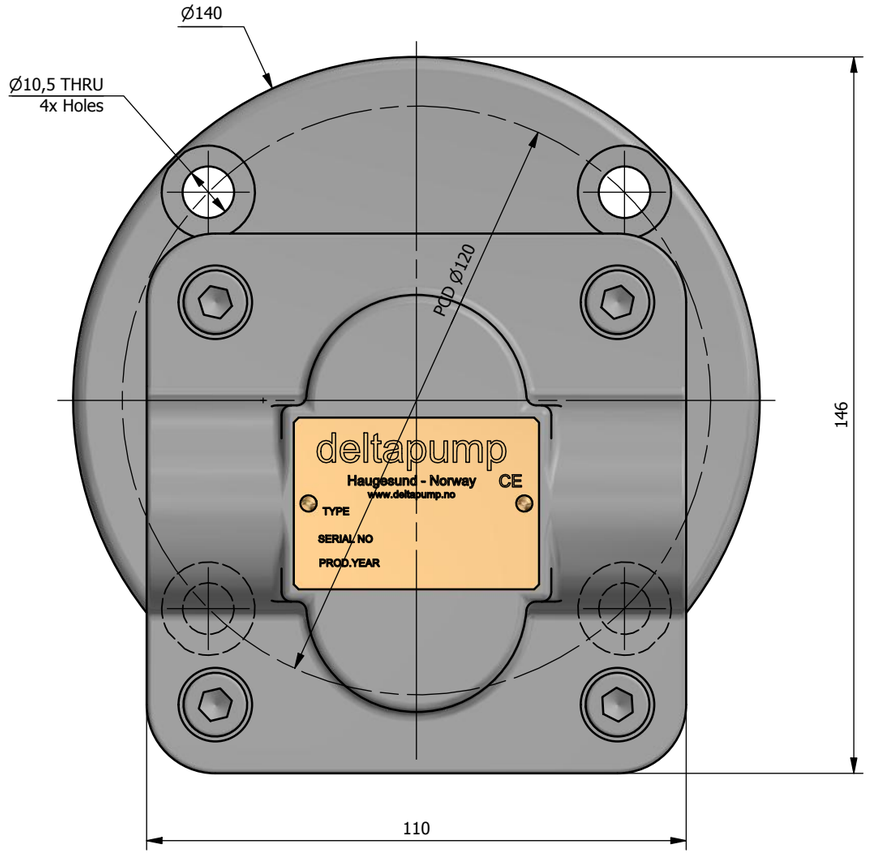

NOTE:
Deltapump gear-pumps functions in both directions INLET/OUTLET(Flow) is selectable if you change the motor turn direction.

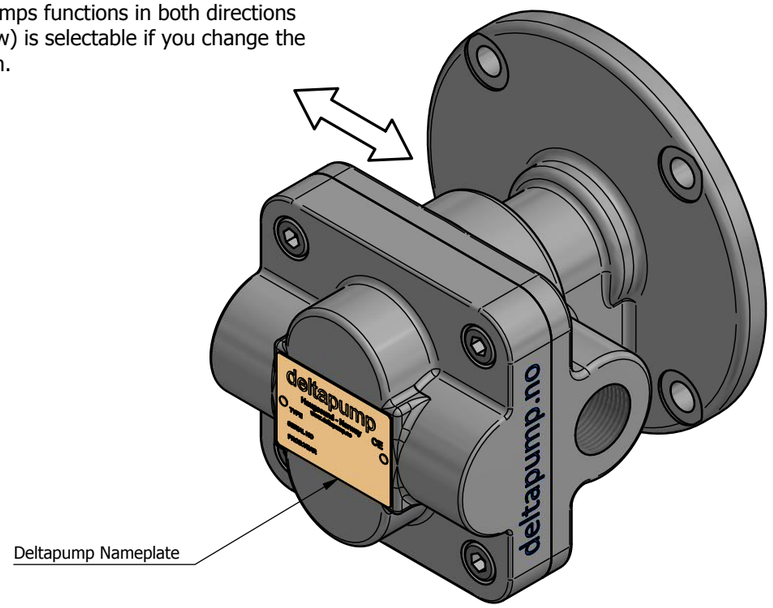

Notes
Keyway dimensions:
Length : 28mm
Width : 5mm

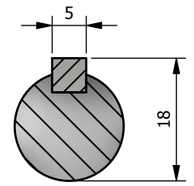

Section A-B

NOTES:
* A Name Plate, is mounted on the Pump

Material: -			
Unless otherwise specifed: Dimensions are in MM Machining Tolerances are: NS-ISO-2768-1-M NS-ISO-2768-2-K Surface Finish: Ra3.2 Size: A3 | Do Not Scale	Designed by: RSK — Date: 24/11/2020 Checked by: — Date: 24/11/2020 Approved by: — Date: 24/11/2020	Deltapump AS 5537 Haugesund Norway Mass (kg): 6.41 kg Sheet: 1 of 1	SINCE 1878 deltapump deltapump.no | orgnr: 992 107 626
Projection Angle	Description: Delta 589 - Pump ASSY - 3/4" BSP - OUTLINE — Stock Number: 9-589	Drawing Reference: DP160030 Rev. 0	

This drawing and the information contained in it are proprietary and the sole property of DELTAPUMP A.S. and any use, reproduction or distribution, in whole or part, without the prior written consent is prohibited.

DELTAPUMP - Reserve "The Right" to change ALL OUTLINE DIMENSIONS without further notice!

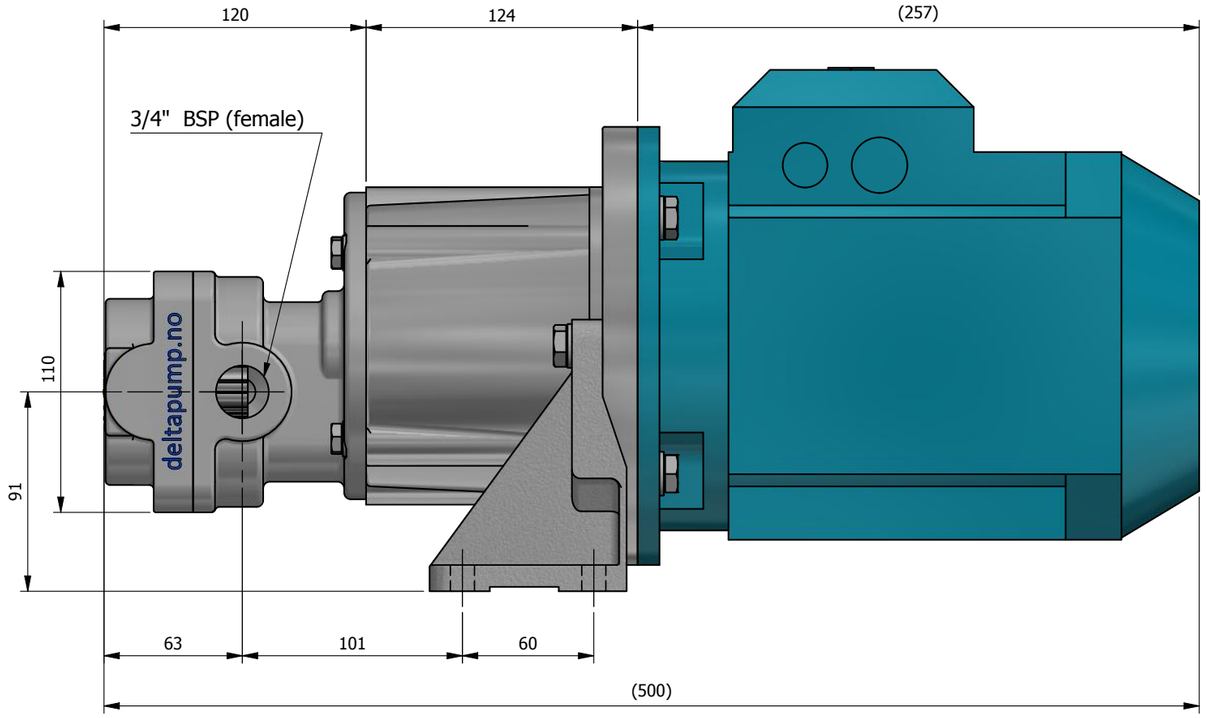

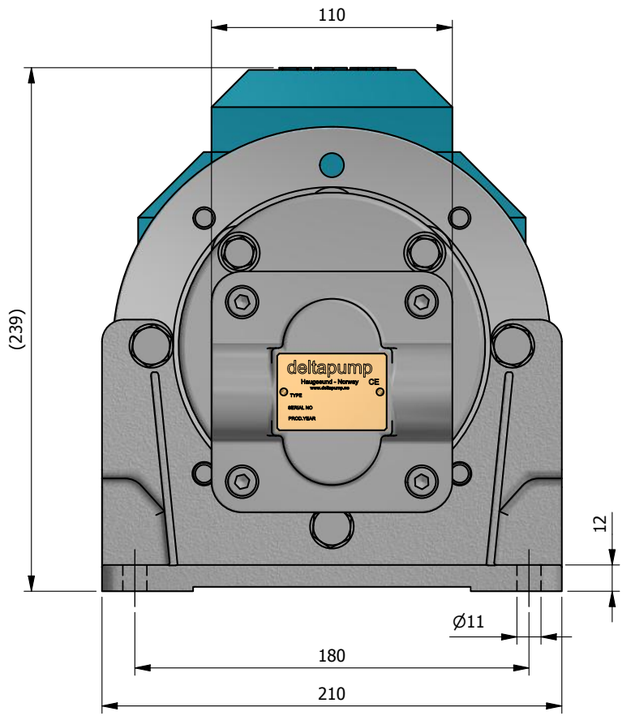

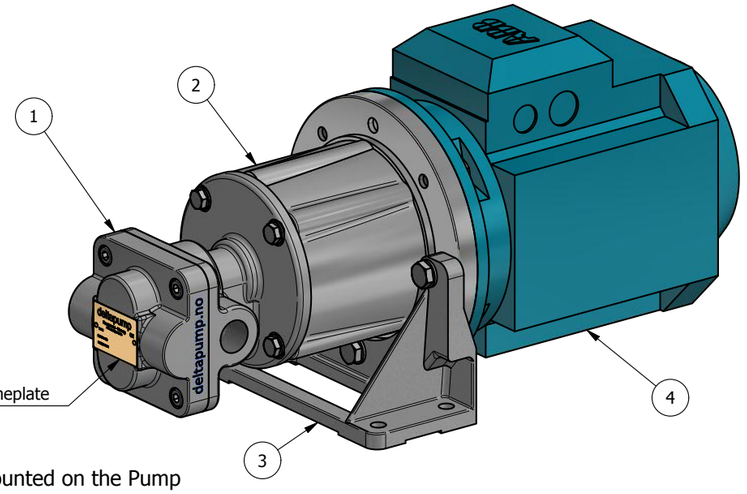

NOTE:
Deltapump gear-pumps functions in both directions INLET/OUTLET(Flow) is selectable if you change the motor turn direction.

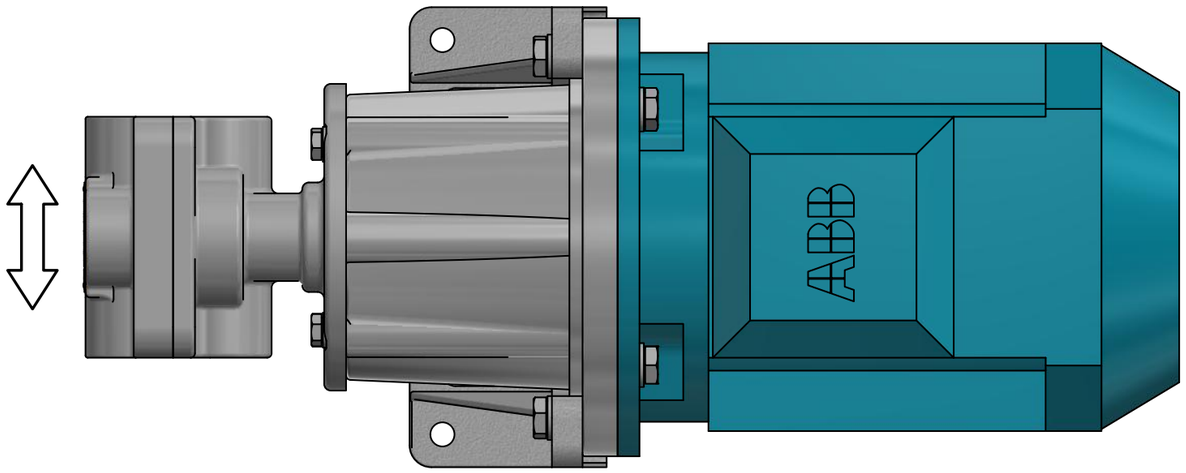

NOTES:
* A Name Plate, is mounted on the Pump

ITEM	QTY	STOCK NUMBER	DESCRIPTION	MATERIAL
1	1	9-589	Delta 589 - Pump ASSY - 3/4" BSP	-
2	1	255232	Bellhousing	Aluminum
3	1	255233	Foot Flange	Aluminum
4	1	N/A	Electric Motor - Size 90 -B5	Alu./Copper

Material: -

Unless otherwise specifed:
Dimensions are in MM
Machining Tolerances are:
NS-ISO-2768-1-M
NS-ISO-2768-2-K
Surface Finish: Ra3.2
Size: A3 | Do Not Scale

Projection Angle

Designed by	Date	Deltapump AS 5537 Haugesund Norway
RSK	30/11/2020	
Checked by	Date	Mass (kg)
	30/11/2020	25.60 kg
Approved by	Date	Sheet
	30/11/2020	1 of 1

SINCE 1878
deltapump
deltapump.no | orgnr: 992 107 626

This drawing and the information contained in it are proprietary and the sole property of DELTAPUMP A.S. and any use, reproduction or distribution, in whole or part, without the prior written consent is prohibited.

Description: Delta 589 - Pump 3/4" & El. Mot. Size 90 - OUTLINE
Stock Number: N/A
Drawing Reference: DP160031 Rev. 0

DELTAPUMP - Reserve "The Right" to change ALL OUTLINE DIMENSIONS without further notice!

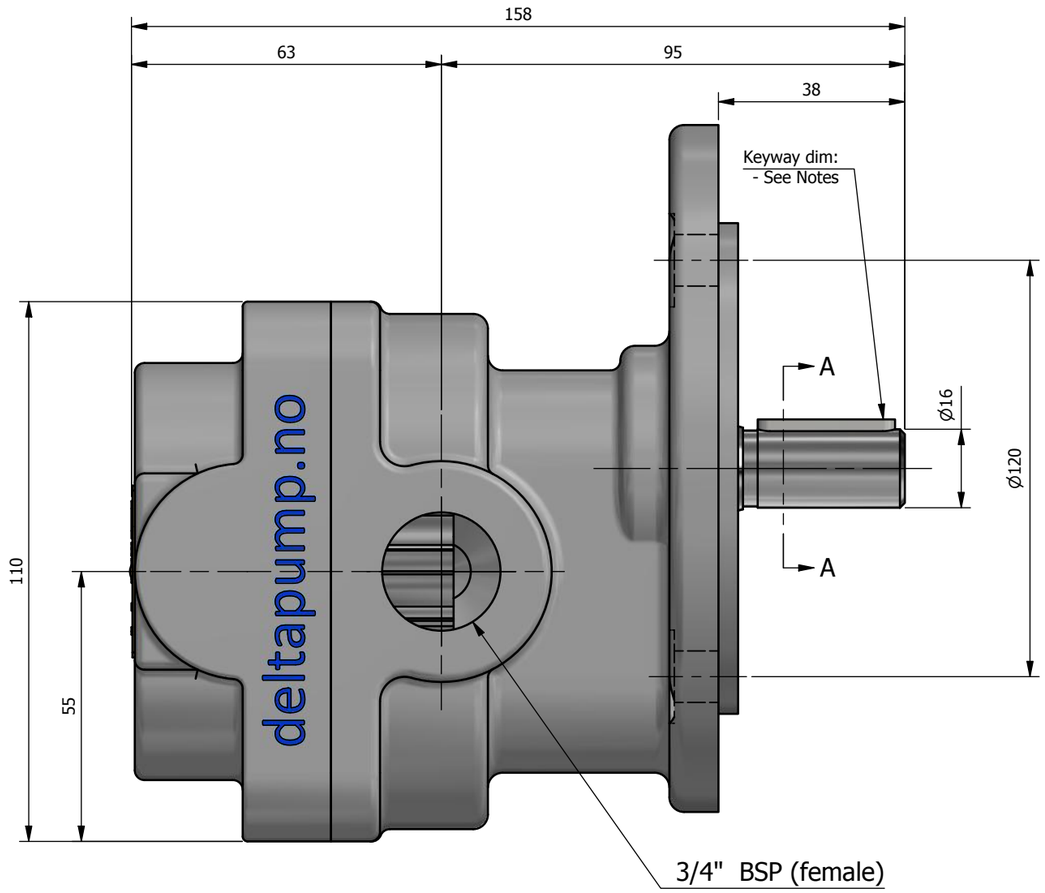

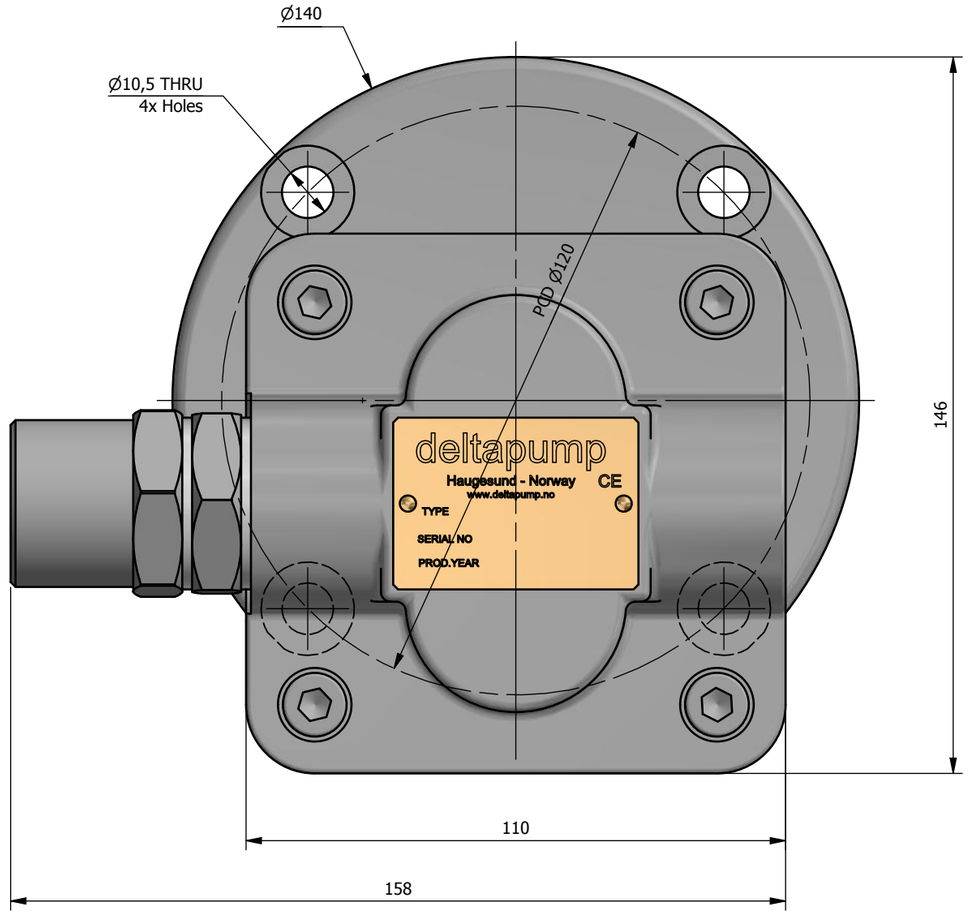

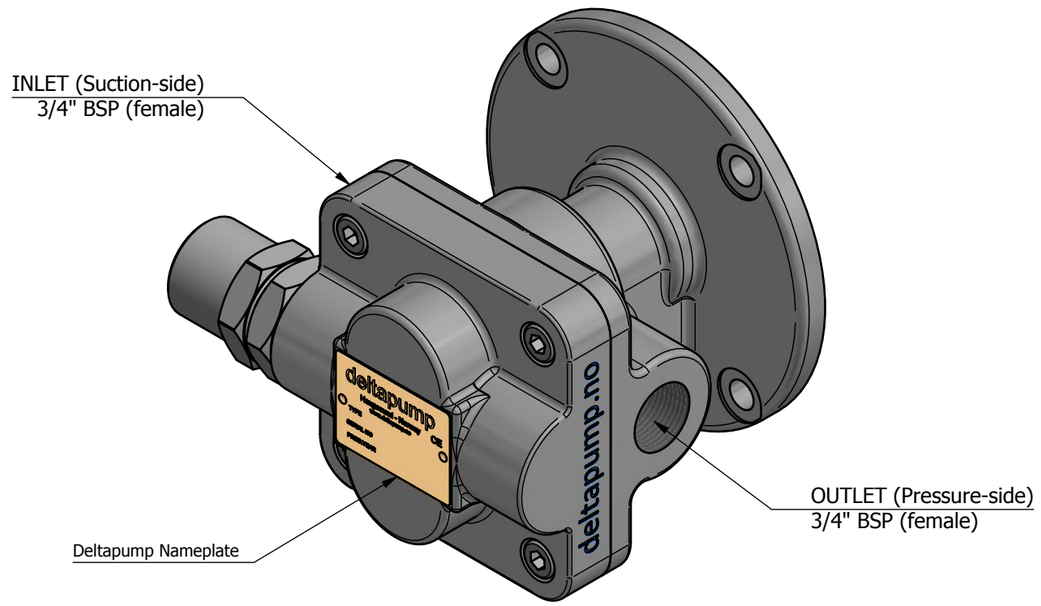

Notes

Keyway dimensions:
Length : 28mm
Width : 5mm

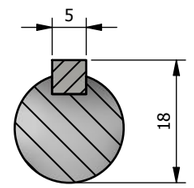

Section A-A

NOTES:
* A Name Plate, is mounted on the Pump

Material: -			
Unless otherwise specifed: Dimensions are in MM Machining Tolerances are: NS-ISO-2768-1-M NS-ISO-2768-2-K Surface Finish: Ra3.2 Size: A3 | Do Not Scale	Designed by RSK — Date 24/11/2020	Deltapump AS 5537 Haugesund Norway	SINCE 1878 deltapump deltapump.no | orgnr: 992 107 626
	Checked by — Date 24/11/2020	Mass (kg) 6.53 kg	
Projection Angle	Approved by — Date 24/11/2020	Sheet 1 of 1	This drawing and the information contained in it are proprietary and the sole property of DELTAPUMP A.S. and any use, reproduction or distribution, in whole or part, without the prior written consent is prohibited.
	Description: Delta 589X - Pump ASSY - 3/4" BSP - OUTLINE	Stock Number: 9-589X	Drawing Reference: DP160026 Rev. 0

DELTAPUMP - Reserve "The Right" to change ALL OUTLINE DIMENSIONS without further notice!

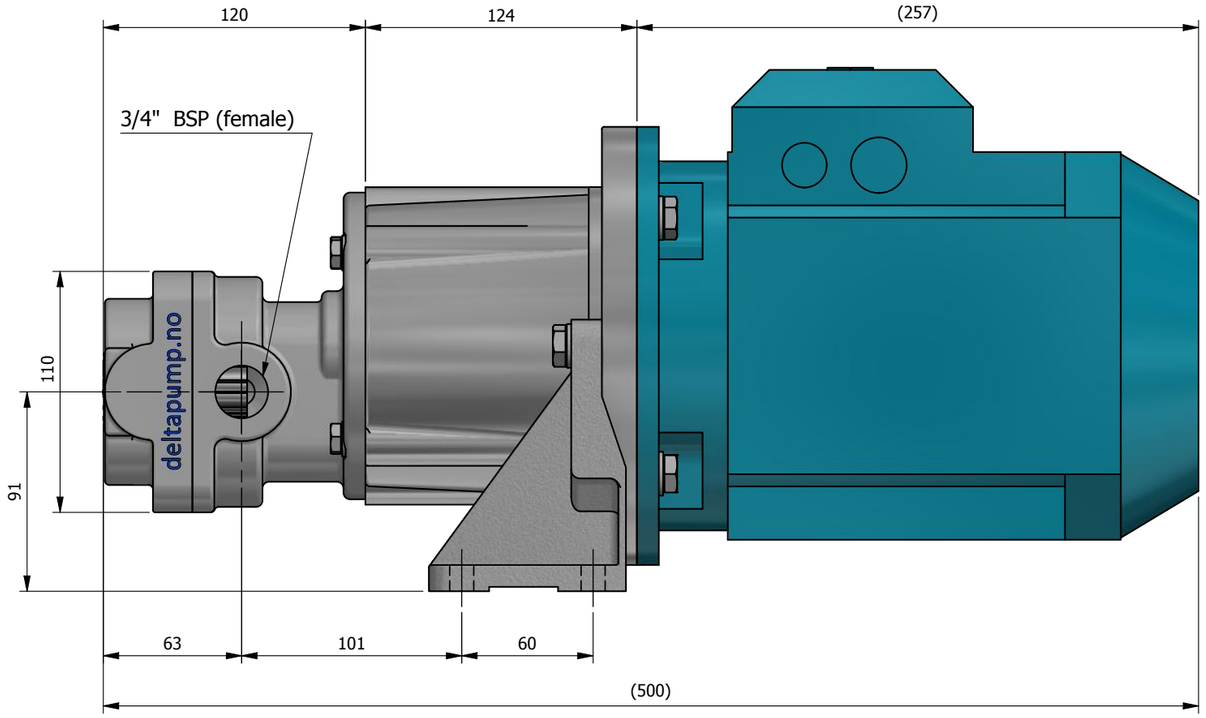

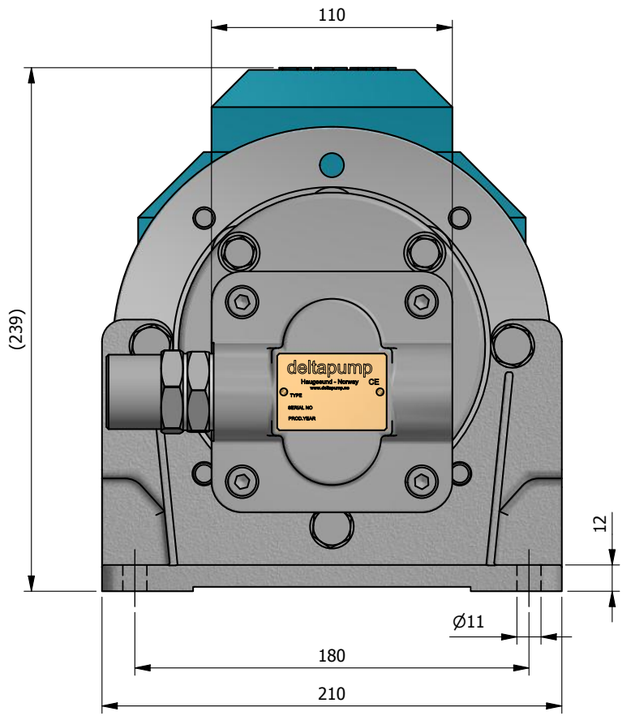

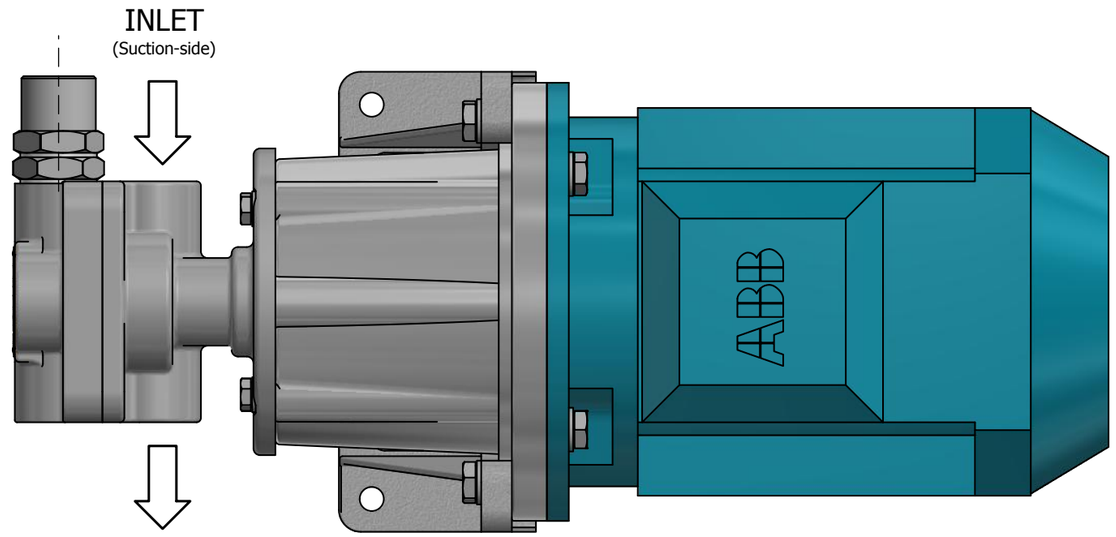

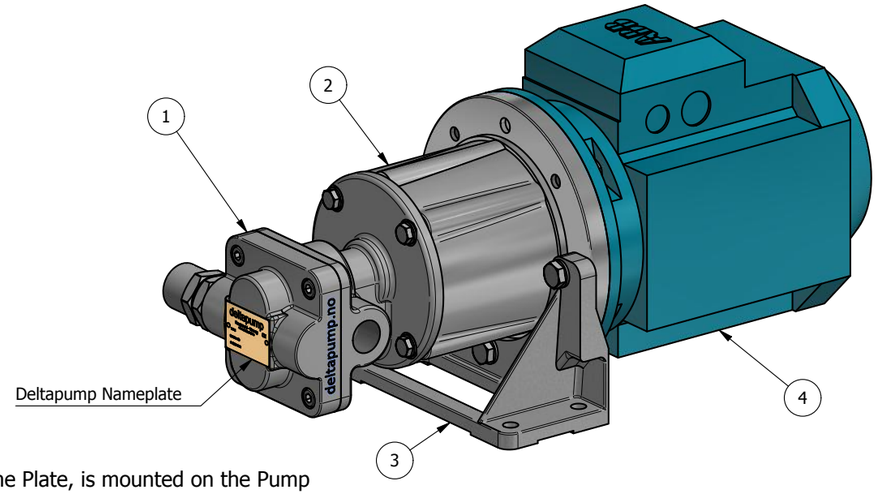

NOTES:
* A Name Plate, is mounted on the Pump

ITEM	QTY	STOCK NUMBER	DESCRIPTION	MATERIAL
1	1	9-589X	Delta 589X - Pump ASSY - 3/4" BSP	-
2	1	255232	Bellhousing	Aluminum
3	1	255233	Foot Flange	Aluminum
4	1	N/A	Electric Motor - Size 90 -B5	Alu./Copper

Material: -

Unless otherwise specifed:
Dimensions are in MM
Machining Tolerances are:
NS-ISO-2768-1-M
NS-ISO-2768-2-K
Surface Finish: Ra3.2
Size: A3 | Do Not Scale

Projection Angle

Designed by	Date	Deltapump AS 5537 Haugesund Norway
RSK	30/11/2020	
Checked by	Date	Mass (kg)
	30/11/2020	25.73 kg
Approved by	Date	Sheet
	30/11/2020	1 of 1

SINCE 1878
deltapump
deltapump.no | orgnr: 992 107 626

This drawing and the information contained in it are proprietary and the sole property of DELTAPUMP A.S. and any use, reproduction or distribution, in whole or part, without the prior written consent is prohibited.

Description: Delta 589X - Pump & El. Motor Size 90 - OUTLINE
Stock Number: N/A
Drawing Reference: DP160027 Rev. 0

DELTAPUMP - Reserve "The Right" to change ALL OUTLINE DIMENSIONS without further notice!

Pump Characteristics DELTA 589(X)

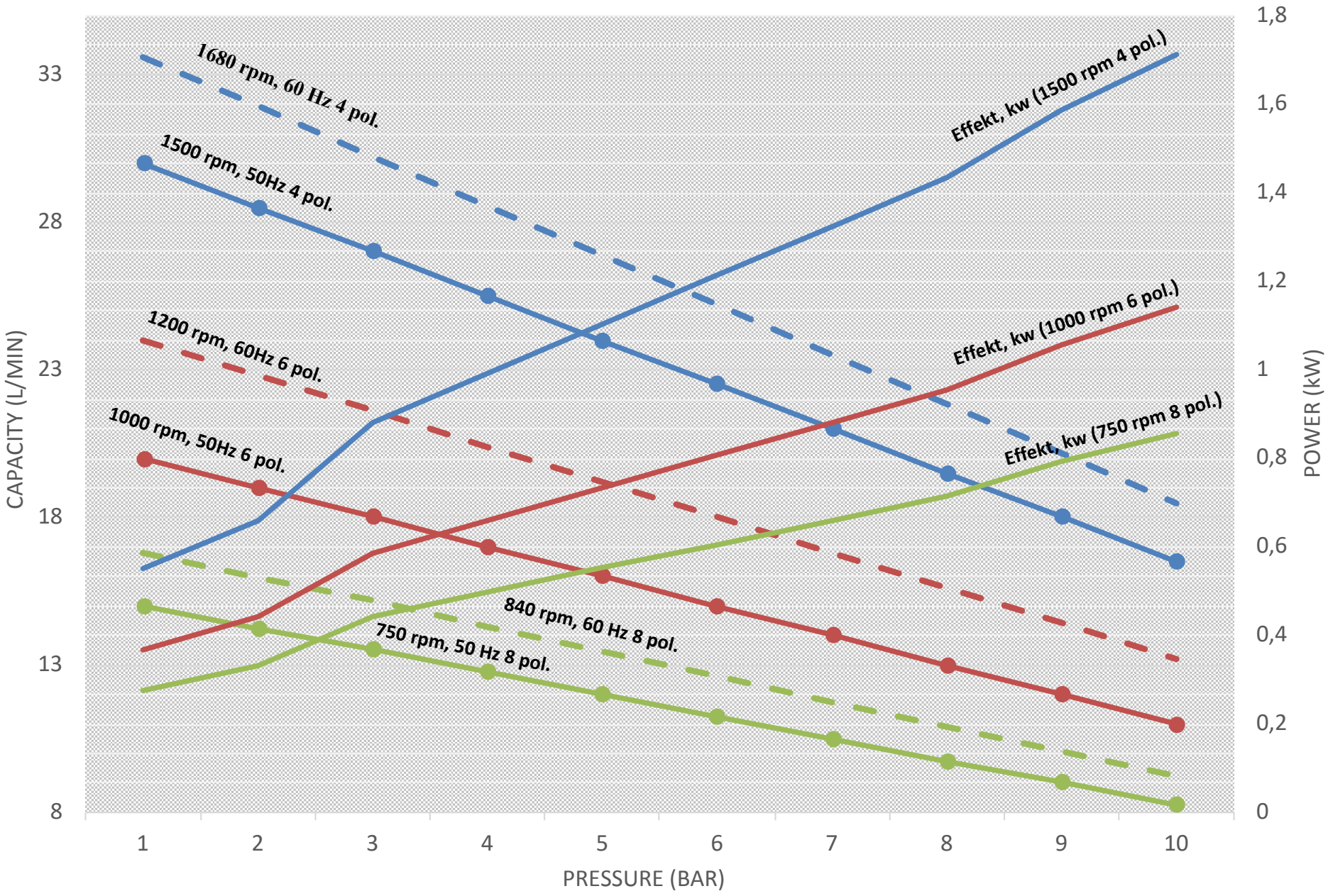

deltapump